16. Mount the turret on the hull. Push the point of the thumbtack through the hole in the middle of the white circle on the top of the hull. The turret rotates, and it relies on gravity to keep it in place—just like the turret of the real *Monitor.*

17. ***If you are building the waterline version, skip this step and go to Step 20.*** Score the dotted lines on Part Q, the model's stand. Cut out slots S42 and S45, and cut out Part Q. Fold the sides of the stand down and glue the corners together, putting glue on tabs T38 and T39.

18. Parts R and S are the pedestals on which the model sits. Score the dotted lines on them and cut them out. Fold each into a box shape and glue the corners together, putting glue on tabs T40 and T41 (on Part R) and tabs T43 and T44 (Part S).

Mount the pedestals on the stand by pushing tabs T42 and T45 into slots S42 and S45. Turn the stand over and put a little glue on the tabs where they stick through.

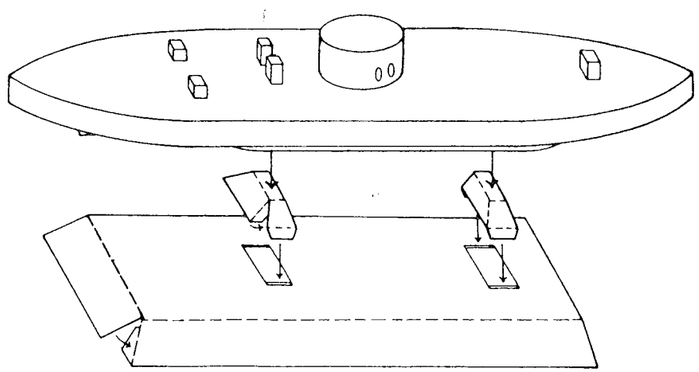

19. On the bottom of the hull are two white rectangles marked "Glue Part R HERE" and "Glue Part S HERE." Smear glue on the tops of the pedestals and press them against those rectangles. Line up the model carefully so it is centered on the stand.

20. As a finishing touch, use black and red marking pens to ink out any white spots and lines that are visible where the parts are folded and come together.

Enjoy your model of the USS *Monitor.*

USS *Monitor*

Before You Start

Note to parents and teachers: This project requires precise cutting with a sharp knife. Young children will need adult supervision. Cutting out some of the parts will be tedious; you may want to cut out the more complicated ones, such as Part A, in advance.

To build this model you will need:

- Good pair of scissors—the smaller the better
- Sharp hobby knife, such as an X-acto knife
- Glue. Cream or yellow carpenter's glue works best, but white glue will work also.
- Ruler or some other kind of straightedge
- Thumbtack
- Toothpicks to put glue in hard-to-reach places
- Medium-tipped, black felt-tip marker

Protect your table with newspapers or a sheet of cardboard. You will get glue on your hands; wash them now and then.

Solid, heavy lines mark the edges of each part; ***cut them out*** along those lines. Whenever you cut a straight line, use your knife and straightedge. Use your scissors only on curved lines.

After you cut out each part, run the tip of the black marker along the edge to cover the white paper. This helps hide the edges when they are folded.

Dashed lines (— — — — —) show where the parts are to be ***scored and folded.*** To score a line, run your knife blade, using the straightedge to guide it, ***lightly*** along the dotted line, so the knife just scratches it. Then make the fold. A few parts are marked "Fold UP." All other folds go ***down.***

"S" means "slot" and "T" means "tab." Cut out all the slots on a part before you do any folding or gluing. Some tabs go in slots; others will be glued to the back of parts. When a tab goes into a slot, the numbers match. T3, for example, goes into S3.

Before gluing, test fit each piece for alignment. With the black marker, cover any white spots and edges that might show.

You can build your *Monitor* as either a ***waterline*** or ***full-hull*** model. The waterline model only shows what you would see if the real ship was floating in the water. The full-hull model represents the whole ship, including the part that is normally under water. The waterline version is easier.

Assembly Instructions

1. Start by scoring and cutting out Part A, the upper portion of the hull. On the right side of the paper are two lines marked "Cut HERE for waterline model." If you want to build the waterline model, use your knife and straightedge to cut along those lines—all the way across the paper—where the red meets the black.

Using your knife and straightedge, score the dotted lines on Part A. Use your thumbtack to punch a hole through the dot marked "Punch hole." Then cut out all the slots (do not miss S21, the long, straight one on the red part of Part A). ***Do not fold or glue*** anything on Part A yet.

2. Part B is the pilot house, where the captain and the helmsman stood during battle. Score the dotted lines, cut out Part B, and fold it into a box. Smear a little glue on T1 and T2, and squeeze the sides and top of the box together. Hold it with your fingers for a few minutes until the glue sets. Then push the two tabs T3 into slots S3. Put a little glue on the back of Part A where the tabs come through.

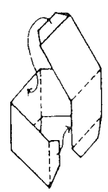

3. Parts C and D are the smokestacks. Parts E and F are the ventilators, which drew air into the ship's engines. These parts assemble just like the pilot house. They cover up the white rectangles on the after-part of Part A; tabs T6 go in slots S6, tabs T9 go in slots S9, etc.

The smokestacks and ventilators were removed when the *Monitor* went into battle, so they would not get hit by the ship's guns. If you like, you can leave Parts C, D, E, and F off your model and cover the white rectangles on Part A with a black marking pen.

4. ***If you are building the waterline version, skip this step and go to Step 10.*** Part G is the bottom part of the hull. Score the dotted lines and cut out Part G. Fold down along all the scored lines.

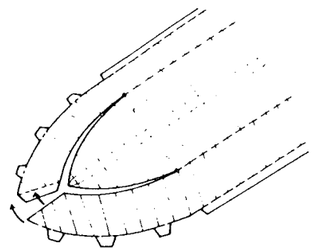

Gently bend the ends of Part G around and glue them to each other, so that Part G looks like a dish. Put a little glue on T16, bend the curved ends carefully with your fingers, and pinch T16 against the back of the adjoining curved part. Be careful that these parts line up just right. Do the same thing at the other end with T17.

5. Push the remaining tabs on Part G (T18, T19, and T20) into the matching slots on Part A. Turn Part A over and put glue on the tabs where they stick through. Pinch the tabs against the back of Part A and hold them until the glue sets.

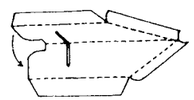

6. Parts H and I represent, in simplified form, the propeller and rudder. Score the dotted lines on Part H and cut out the narrow white slit in the middle of it. Cut out Part H and fold up the two sections marked "Fold UP." Fold Part H over on the dotted line in the middle. Smear some glue on the back and squeeze the two halves together. Push T21 into S21, the long, skinny slot on Part A. Glue the two red sections that you just folded up to Part G, where it says "Glue Part H HERE." Put a little glue on the back of Part A where the tab comes through.

7. Score and cut out Part I (do not forget the slot in the middle), fold it over, smear some glue on the back, and squeeze the halves together.

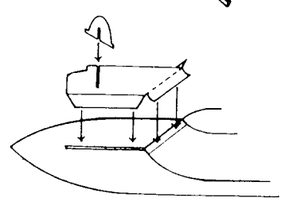

8. Press Parts H and I together, so the slots interlock. Using a toothpick, put a tiny bit of glue where Parts H and I come together, and where Part I meets Part A. Before the glue dries, line up Part I carefully so it sits squarely across the ship.

9. Now you are ready for the trickiest part of the project: putting the hull together. Fold all the tabs on Part A down, and fold the hull sides and bottom along the scored lines. Squeeze the hull sides together at the bow, gluing them together with tab T22.

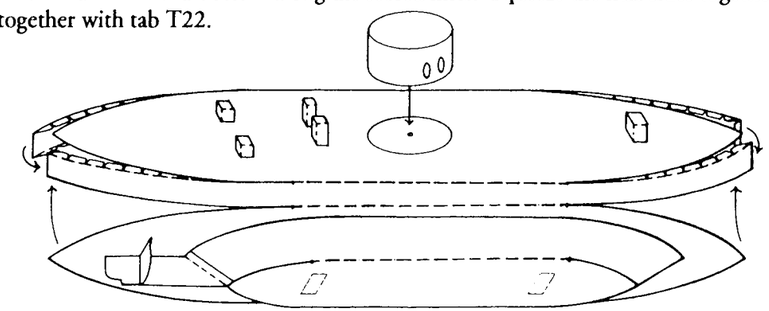

Put a little glue on tabs T23 and ***carefully*** press them against the bottom of the black section of Part A. Make sure the corners of the hull are nice and even. When the glue has set, do the same thing with the stern (back) using tabs T24 and T25. When that glue has dried, put glue on tabs T26, T27, and T28. Fold the hull bottom (the red part) around and press it carefully against the tabs. Hold the hull together until the glue sets.

10. ***Skip this step unless you're building the waterline version.*** If you are, you have already cut off the red parts of Part A. You will not use Parts G, H, and I.

Fold all the tabs on Part A down and fold the hull sides down along the scored lines. Squeeze the hull sides together at the bow, gluing them together with tab T22. Put a little glue on tabs T23 and ***carefully*** press them against the underside of Part A. Make sure the corners of the hull are nice and even. When the glue has set, do the same thing with the stern, using tabs T24 and T25. Hold the hull together until the glue sets.

11. Next build the turret —the big round area containing the *Monitor*'s two guns.

When the guns were being loaded, and when the ship was not fighting, the gunports were closed with iron shutters. You can build your model with the gunports open and the gun barrels sticking out, or with the gunports closed.

Next to Part J, which makes up most of the turret, you will see two arrows, marked "Gunports." The arrows point at two black ovals. If you want them open, carefully cut out the two ovals with your knife.

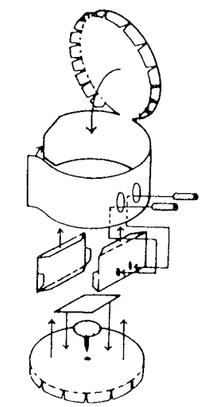

Score the dotted lines on Part J, cut it out, and fold the round part (the roof of the turret) down. Fold down tabs T29. Wrap the rectangular strip around your finger until the ends meet. Put glue on tabs T29 and T30. Pinch T30 against the back of the other end of the rectangular strip and press the roof into the turret. Be sure all the tabs T29 go inside. Turn the turret upside down and press the roof against your table, so the roof is flat and its edge is even all the way around. Press tabs T29 against the inside of the turret and hold until the glue sets.

12. Parts K and L are partitions that stiffen the turret; Part M is the turret floor. Score the dotted lines on these parts, cut them out, and fold all the tabs down. Push the point of your thumbtack through the spot marked "Punch hole" on Part M. Cut out Part N and glue it to Part M, so it holds the thumbtack in place. Let the glue set.

Now glue Parts K and L to Part M, using T36 and T37 to locate them. Part M is marked to show where T36 and T37 go.

13. ***Omit this step if you are building the model with the gunports closed.*** The gun barrels, Parts O and P, are printed on this sheet. Cut out the parts and roll them up as tight as you can, with the black portions on the outside. Using a toothpick, put a tiny bit of glue on the edge of the roll to make the gun stick together.

14. On Part L are two dots marked "Glue Gun Barrels HERE." If you are building the model with the gunports closed, you can ignore these dots. If your gunports are going to be open, the dots have to be lined up with the gunports when this step is finished.

Put glue on tabs T31, T32, T33, T34, and T35, which are on Parts K, L, and M. Insert this assembly into the turret (Part J). The bottoms of tabs T31 should be even with the bottom of the turret. (Otherwise, wait until the glue dries and trim them off carefully with your knife.)

15. ***Omit this step if you are building the model with the gunports closed.*** Put a drop of glue on one end of each gun barrel. Slip the barrels through the gunports and press the ends against the dots on Part L.

NOTE: THESE ARE THE GUNS FOR YOUR MODEL.

Part O

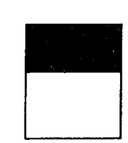

Part P